ASSEMBLY INSTRUCTION
FRAMELESS TOWER CASE

NOTE: IT IS RECOMMENDED THAT TWO PERSONS TO ASSEMBLE THIS UNIT.

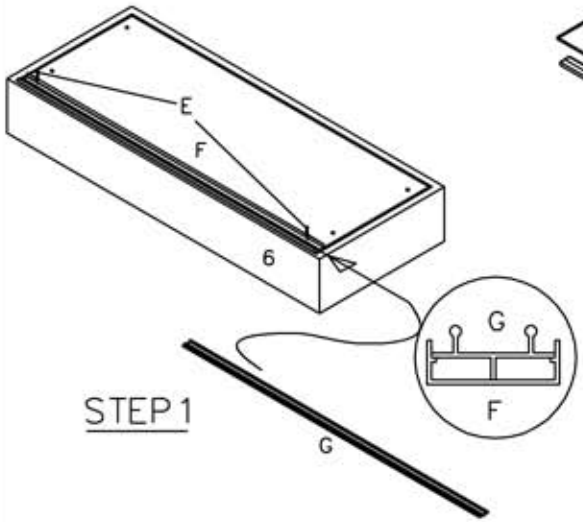

STEP1

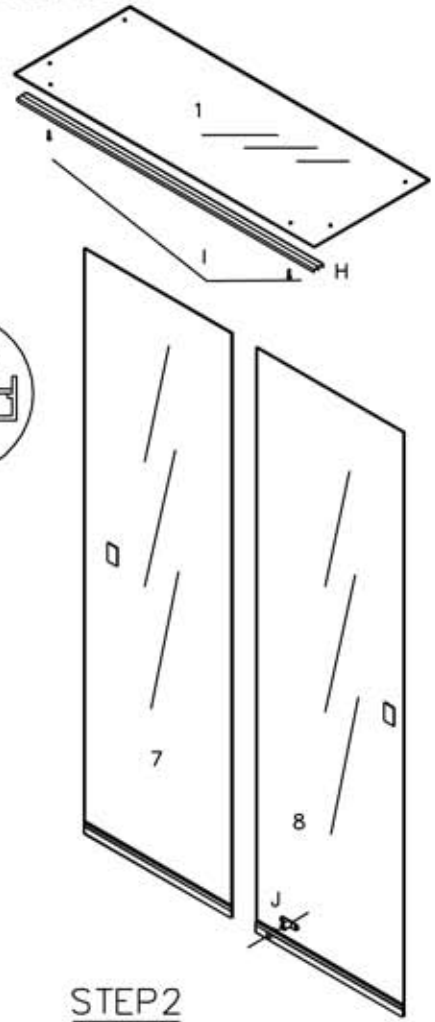

STEP2

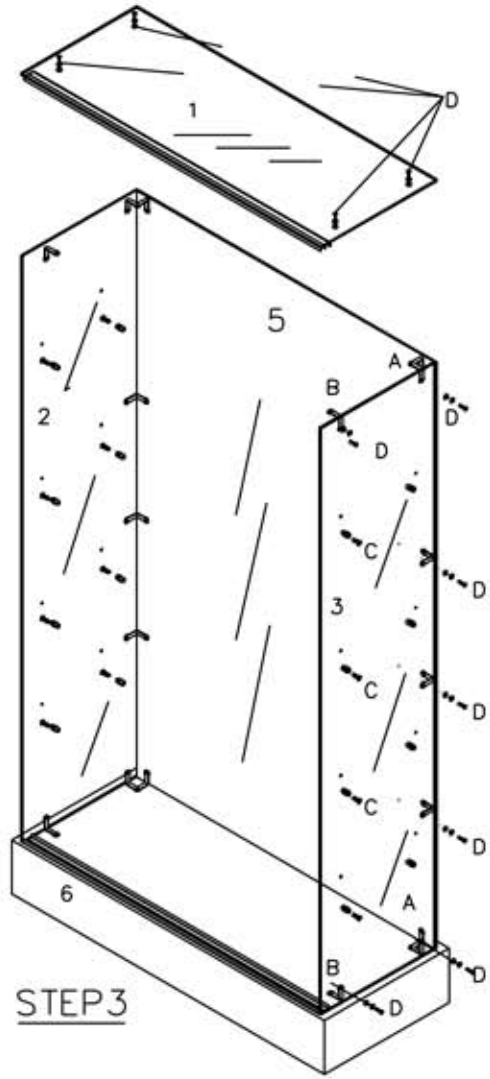

STEP3

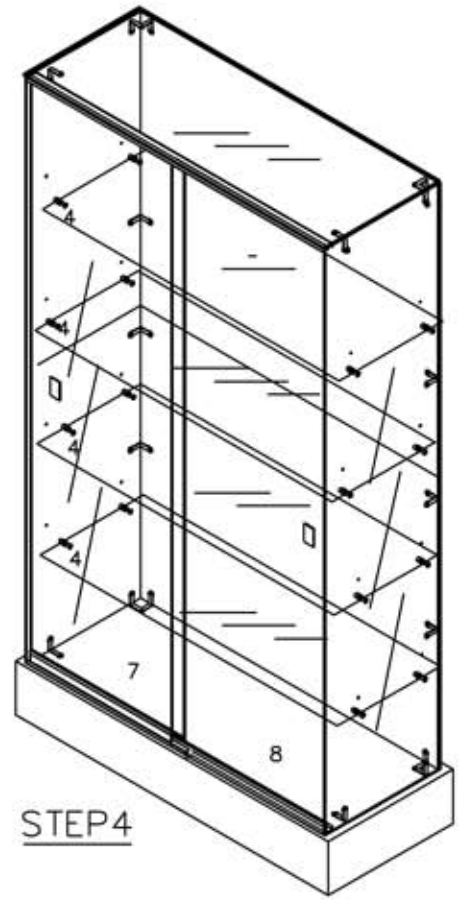

STEP4

PARTS LIST		
NO:	QTY	DESCRIPTION
1	1PC	TOP
2	1PC	SIDE BOARD
3	1PC	SIDE BOARD
4	4PCS	SHELF
5	1PC	BACK BOARD
6	1SET	WOOD BOTTOM BASE
7	1PC	RIGHT DOOR
8	1PC	LEFT DOOR

A	B	C	D	E	F	G	H	I	J	K	L
4PCS	10PCS	16PCS	30PCS	4PCS	1PC	1PC	1PC	2PCS	1PC	1PC	
										TOOL	